ASTRO II
Pull-Down Sink Mixer

2543830 | Chrome
2543831 | Brushed Nickel
2543836 | Brushed Brass
2543837 | Matte Black
2543839 | Gun Metal

WELS 5 Star 6.0L/M | MP
Swivel Spout | Dual Function Spray

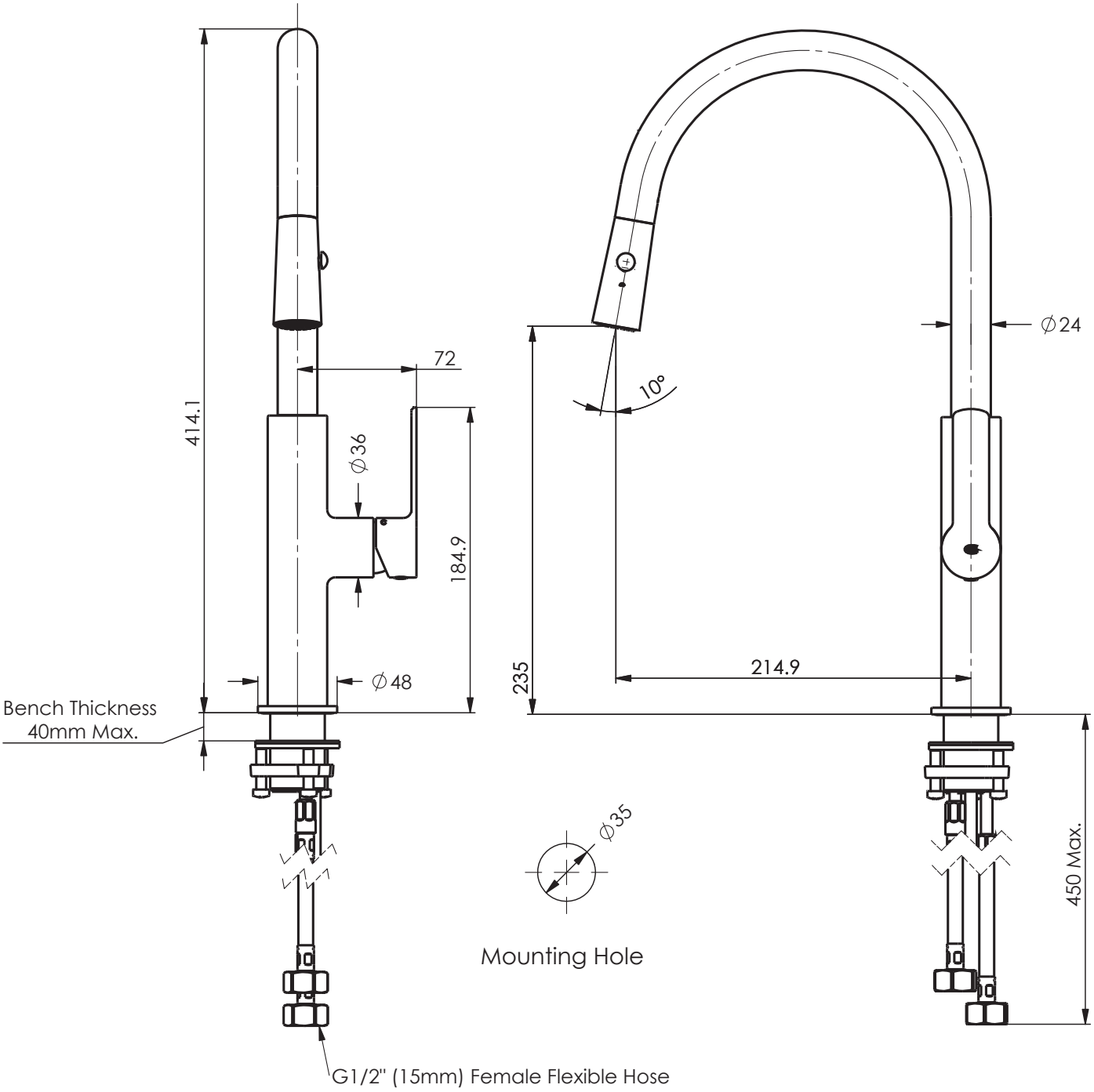

NZ PHONE - 0800 655 455
EMAIL - nzsales@greenstapware.com
WEBSITE - greenstapware.com

GREENS
where life meets water