ASTRO II
Basin Mixer

LF251380CP-2 | Chrome
LF251380BN-2 | Brushed Nickel
LF251380BB-2 | Brushed Brass
LF251380MB-2 | Matte Black
LF251380GM-2 | Gun Metal

WELS 5 Star 6.0L/M | AP
Fixed Spout

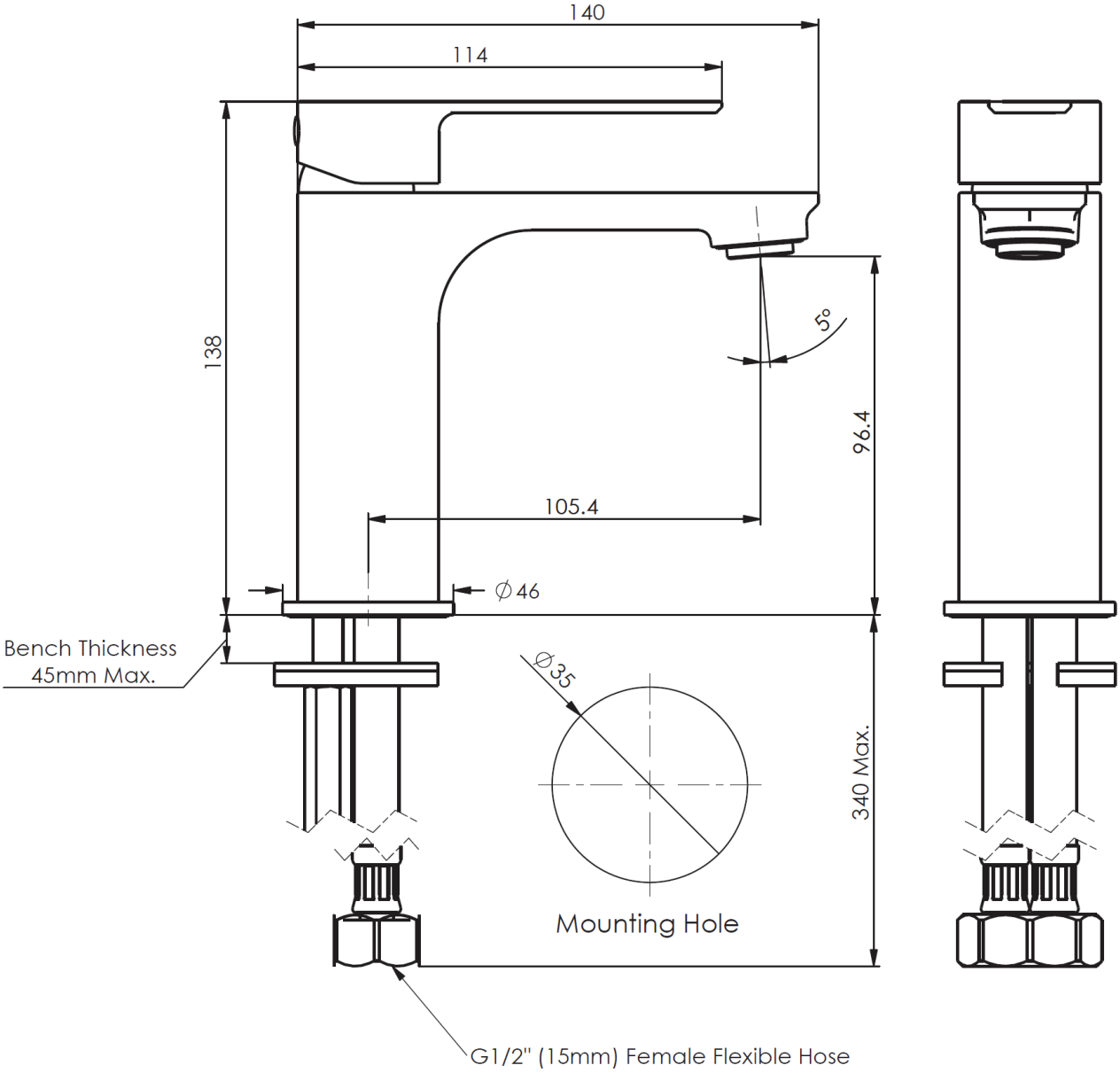

NZ PHONE - 0800 655 455
EMAIL - nzsales@greenstapware.com
WEBSITE - greenstapware.com

GREENS
where life meets water