VANTAGE
Wall Basin Mixer

19703550 | Chrome
19703551 | Brushed Nickel
19703556 | Brushed Brass
19703557 | Matte Black
19703559 | Gun Metal

WELS 4 Stars 7.5L/Min | AP | Fixed Spout

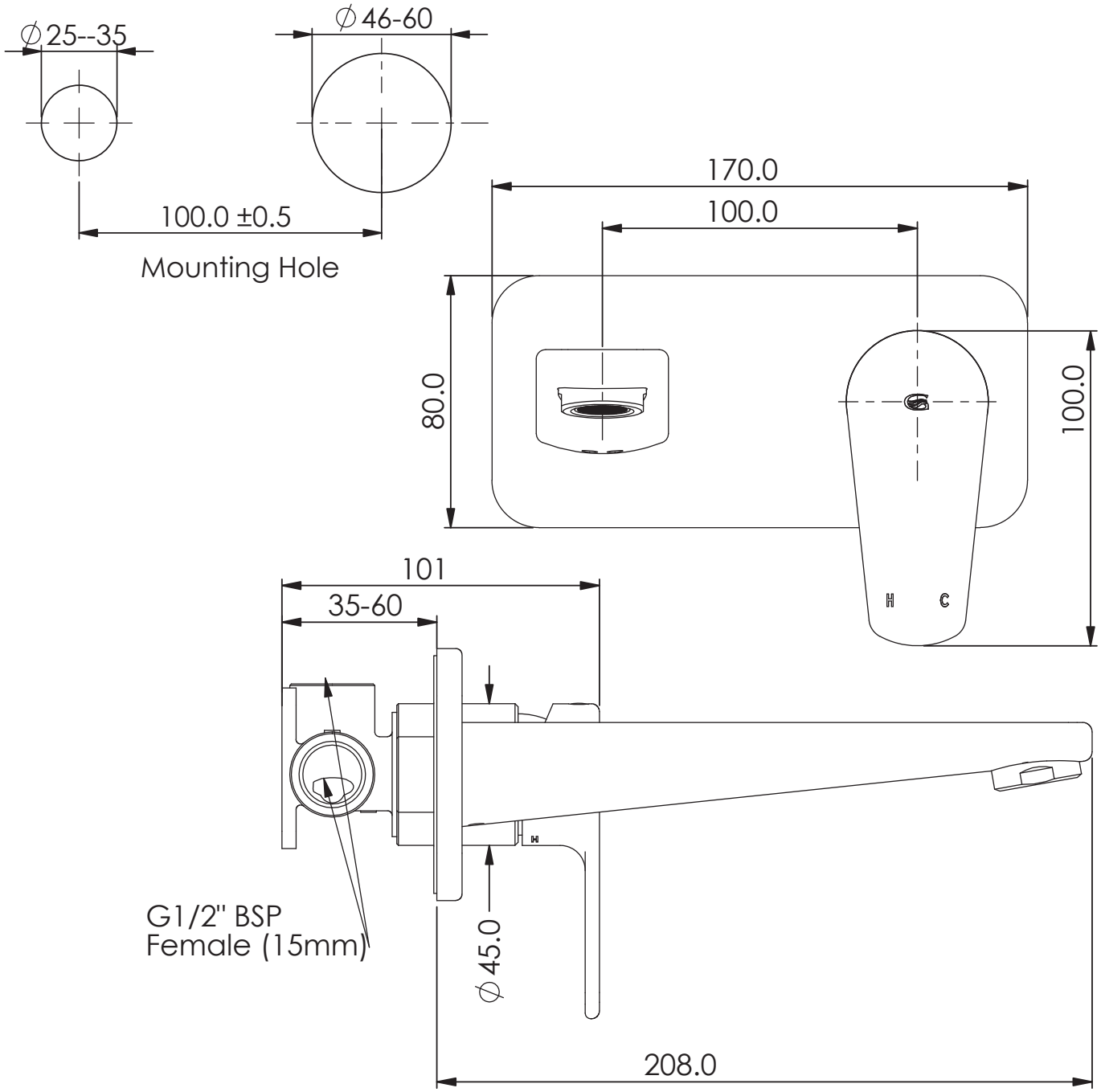

NZ PHONE - 0800 655 455
EMAIL - nzsales@greenstapware.com
WEBSITE - greenstapware.com

GREENS
where life meets water